National curriculum tests

Key stage 2

Mathematics

Mark schemes

SAMPLE BOOKLET

Published July 2015

This sample test indicates how the national curriculum will be assessed from 2016.
Further information is available on GOV.UK at **www.gov.uk/sta**.

[BLANK PAGE]

This page is intentionally blank.

Contents

1. Introduction 4

2. Structure of the key stage 2 mathematics test 4

3. Content domain coverage 4

4. Explanation of the mark schemes 6

5. General marking guidance 7
5.1 Applying the mark schemes 7
5.2 General marking principles 7

6. Marking specific types of question: summary of additional guidance 10
6.1 Responses involving money 10
6.2 Responses involving time 11
6.3 Responses involving measures 12

7. Mark schemes for Paper 1: arithmetic 13

8. Mark schemes for Paper 2: reasoning 18

9. Mark schemes for Paper 3: reasoning 24

1. Introduction

The Standards and Testing Agency (STA) is responsible for the development and delivery of statutory tests and assessments. STA is an executive agency of the Department for Education.

The 2014 national curriculum will be assessed for the first time in May 2016. The sample test and mark schemes set out how the new national curriculum will be assessed from 2016 onwards. This test has been developed to meet the specification set out in the test framework for mathematics at key stage 2. The test frameworks are on the GOV.UK website at www.gov.uk/sta.

A new test and mark scheme will be developed each year.

The 2016 key stage 2 tests will be marked by external markers. The sample tests will be marked by teachers if they are used to prepare pupils for the 2016 tests.

Scaled score conversion tables are not included in this document. Conversion tables are produced as part of the standard-setting process. As the sample tests are not subject to standard setting, they are not available for these tests. Scaled score conversion tables for the 2016 tests will be published at www.gov.uk/sta in June 2016.

A variety of questions has been included in this sample test to demonstrate the formats and curriculum content that pupils may encounter in a live test. A commentary is provided for any questions where it is useful.

This sample test mark scheme is provided to give teachers an indication of how the tests will be marked. The mark schemes for the sample tests have been subject to a shorter process than the full, rigorous development process that is used for live mark schemes. The pupil examples are based on responses gathered from the test trialling process.

The sample test and mark schemes have been reviewed by teachers and other expert reviewers.

2. Structure of the key stage 2 mathematics test

The key stage 2 mathematics test materials comprise:

- Paper 1: arithmetic (40 marks)
- Paper 2: reasoning (35 marks)
- Paper 3: reasoning (35 marks)

3. Content domain coverage

The sample test meets the specification set out in the test framework. Table 1 sets out the areas of the content domain that are assessed in the sample test papers. This will be explicit on tests in 2016 and beyond.

The references below are taken from the test framework. They document which areas of the content domain are assessed in each paper. For example, a question assessing 4C7 sets out

to 'multiply two-digit and three-digit numbers by a one-digit number using a formal written layout' and is taken from the Year 4 programme of study.

Table 1: content domain coverage of the sample key stage 2 mathematics test

Paper 1: arithmetic	
Qu.	**Content domain reference**
1	3N2b
2	4C7
3	4F8
4	3C7
5	4C2
6	4C6a
7	3C1
8	4F8
9	4C6b
10	3F4
11	5C6a
12	6F9a
13	5C5d
14	5C2
15	5C6b
16	5C6a
17	6R2
18	6F9b
19	3F4
20	5C2
21	5C7b
22	4C2
23	6C7a
24	5F10
25	6C7b
26	6F5a
27	6R2
28	5C2
29	6C7a
30	5F5
31	6C9
32	6F5b
33	6F4
34	6C7b
35	6F4
36	6F5b

Paper 2: reasoning	
Qu.	**Content domain reference**
1	3N2b
2	3C8
3	4S1
4	4F2
5	4M4c
6	5M4
7	5C5a
8	6A2
9a	3M2a
9b	5G4
10	5C7a
11	5N3b
12	5F10
13	3G2
14	5N4
15	6G4
16	6C8
17	6S3
18	6S1
19	6F10
20	6R4

Paper 3: reasoning	
Qu.	**Content domain reference**
1	5S1
2	5N5
3a	5N3a
3b	5F6b
4	4S1
5	3M9
6	5C6b
7	5M2
8	6P2
9	5M9c
10	4F10b
11	4C2
12	5F10
13	5F3
14	6F9
15	6G3a
16	6C8
17	5F12
18	6R1
19	6C7a
20	6P3

4. Explanation of the mark schemes

The marking information for each question is set out in the form of tables which start in section 7 of this booklet.

The '**Qu.**' column on the left-hand side of each table provides a quick reference to the question number and part.

The '**Mark**' column indicates the total number of marks available for each question part.

The '**Requirement**' column may include two types of information:

- A statement of the requirements for the award of each mark, with an indication of whether credit can be given for a correct method
- Examples of some different types of correct response.

The '**Additional guidance**' column indicates alternative acceptable responses, and provides details of specific type of response which are unacceptable. Other guidance such as the range of acceptable answers is provided as necessary.

5. General marking guidance

5.1 Applying the mark schemes

To ensure consistency of marking, the most frequent procedural queries are listed in section 5.2 along with the action the marker will take. This is followed by further guidance on pages 10 and 12 relating to marking questions involving money, time and other measures. Unless otherwise specified in the mark scheme, markers will apply the following guidelines in all cases.

5.2 General marking principles

We are currently reviewing the general guidance for marking mathematics tests. The general marking principles below are taken from the 2015 key stage 2 levels 3-5 mathematics mark schemes. Some of the principles set out in these tables may be amended as a result of the review.

Table 2: General marking principles

The pupil's response is numerically or algebraically equivalent to the answer in the mark scheme.	Markers will award the mark unless the mark scheme states otherwise.
The pupil's response does not match closely any of the examples given.	Markers will use their judgement in deciding whether the response corresponds with the statement of the requirements given in the 'Requirement' column. Reference will also be made to the 'Additional guidance' column and, if there is still uncertainty, markers will contact the supervising marker.
The pupil has responded in a non-standard way.	Pupils may provide evidence in a form as long as its meaning can be understood. Diagrams, symbols or words are acceptable for explanations or for indicating a response. In arithmetic paper 1, pupils should use formal methods for calculating their answers. For long division and long multiplication questions the correct answers is awarded 2 marks. A partial credit of 1 mark will be awarded for evidence of using formal methods with one arithmetic error. In paper 2 paper 3, a partial credit mark (or marks) will awarded for evidence of a complete and correct method.

There appears to be a misreading affecting the working.	This is when the pupil misreads the information given in the question and uses different information without altering the original intention or difficulty level of the question. For each misread that occurs, 1 mark only will be deducted. In 1-mark questions – 0 marks are awarded. In 2-mark questions that have a method mark – 1 mark will be awarded if the correct method is correctly implemented with the misread number.
No answer is given in the expected place, but the correct answer is given elsewhere.	Where a pupil has shown understanding of the question, the mark(s) will be given. In particular, where a word or number response is expected, a pupil may meet the requirement by annotating a graph or labelling a diagram elsewhere in the question.
The pupil's answer is correct but the wrong working is shown.	A correct response will always be marked as correct.
The response in the answer box is wrong, but the correct answer is shown in the working.	Where appropriate, detailed guidance will be given in the mark scheme, which markers will follow. If no guidance is given, markers will examine each case to decide whether: • the incorrect answer is due to a transcription error, if so, the mark **will** be awarded • the pupil has continued to give redundant extra working which does not contradict work already done, if so, the mark **will** be awarded • the pupil has continued to give redundant extra working which does contradict work already done, if so, the mark **will not** be awarded.
The correct response has been crossed out and not replaced.	Do not give credit for legible crossed-out answers that have not been replaced. Do not give credit for crossed-out answers that have been replaced by a further incorrect attempt.
More than one answer is given.	If all answers are correct (or a range of answers is given, all of which are correct), the mark will be awarded unless prohibited by the mark schemes. If both correct and incorrect responses are given, no mark will be awarded.

The answer is correct but, in a later part of the question, the pupil has contradicted this response.	A mark given for one part will not be disallowed for working or answers given in a different part, unless the mark scheme specifically states otherwise.
The pupil has drawn lines which do not meet at the correct point.	Markers will interpret the phrase 'slight inaccuracies in drawing' to mean 'within or on a circle of radius 2mm with its centre at the correct point'. 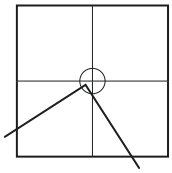 within the circle accepted 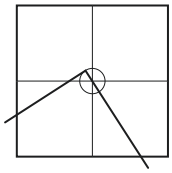 on the circle accepted 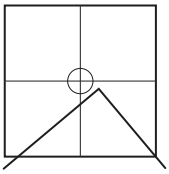 outside the circle **not** accepted

Recording marks awarded

Marking will take place on screen with markers viewing scanned images of pupils' scripts. Marks should be entered into the marking system in accordance with the guidance for the on-screen marking software.

Further details on recording marks and the use of the on-screen system will be given at marker training.

For multiple-mark questions, markers will record the award 3, 2, 1 or 0 as appropriate, according to the mark scheme criteria. There will be provision in the software to record questions not attempted.

The software will aggregate mark totals automatically.

6. Marking specific types of question: summary of additional guidance

6.1 Responses involving money

	Accept	Do not accept
Where the £ sign is given for example: £3.20, £7 £	£3.20 £7 £7.00 Any unambiguous indication of the correct amount, e.g. £3.20p £3 20 pence £3 20 £3,20 £3-20 £3:20	Incorrect placement of pounds or pence, e.g. £320 £320p Incorrect placement of decimal point or incorrect use or omission of 0, e.g. £3.2 £3 200 £32 0 £3-2-0
Where the p sign is given for example: 40p p	40p Any unambiguous indication of the correct amount, e.g. £0.40p	Incorrect or ambiguous use of pounds or pence, e.g. 0.40p £40p

	Accept	Do not accept
Where no sign is given for example: £3.20, 40p ☐	£3.20 40p 320p £0.40 Any unambiguous indication of the correct amount, e.g. £3.20p £0.40p £3 20 pence £.40p £3 20 £.40 £3,20 40 £3-20 0.40 £3:20 3.20 320 3 pounds 20	Incorrect or ambiguous use of pounds or pence, e.g. £320 £40 £320p £40p £3.2 0.4 3.20p 0.40p

6.2 Responses involving time

	Accept	Do not accept
A time interval for example: 2 hours 30 minutes	2 hours 30 minutes Any unambiguous, correct indication, e.g. $2\frac{1}{2}$ hours 2.5 hours 2h 30 2h 30 min 2 30 150 minutes 150 Digital electronic time, i.e. 2:30	Incorrect or ambiguous time interval, e.g. 2.30 2-30 2,30 230 2.3 2.3 hours 2.3h 2h 3 2.30 min

	Accept	Do not accept
A specific time for example: 8:40am, 17:20	8:40am 8:40 twenty to nine Any unambiguous, correct indication, e.g. 08.40 8.40 0840 8 40 8-40 8,40 Unambiguous change to 12- or 24-hour clock, e.g. 17:20 as 5:20pm or 17:20pm	Incorrect time, e.g. 8.4am 8.40pm Incorrect placement of separators, spaces, etc. or incorrect use or omission of 0, e.g. 840 8:4:0 8.4 084

6.3 Responses involving measures

	Accept	Do not accept
Where units are given (e.g. kg, m, l) for example: 8.6kg kg	8.6kg Any unambiguous indication of the correct measurement, e.g. 8.60kg 8.6000kg 8kg 600g	Incorrect or ambiguous use of units, e.g. 8600kg

Note

If a pupil leaves the answer box empty but writes the answer elsewhere on the page, then that answer must be consistent with the units given in the answer box and the conditions listed above.

If a pupil changes the unit given in the answer box, then their answer must be equivalent to the correct answer using the unit they have chosen, unless otherwise indicated in the mark schemes.

7. Mark schemes for Paper 1: arithmetic

Qu.	Requirement	Mark	Additional guidance
1	1079	1m	
2	246	1m	
3	6.4	1m	
4	72	1m	
5	1620	1m	
6	8	1m	
7	463	1m	
8	2.55	1m	
9	140	1m	
10	$\frac{3}{5}$	1m	Accept equivalent fractions or an **exact** decimal equivalent, e.g. 0.6
Question 10 commentary: As the question is expressed in common fractions, pupils should give their answer as a common fraction. An equivalent fraction such as $\frac{6}{10}$ would also be awarded the mark. Since this fraction does have an exact decimal equivalent, the mark scheme also allows this to be awarded the mark.			
11	70	1m	
12	128	1m	
13	16	1m	
Question 13 commentary: Pupils are expected to know the notation for square and cube numbers (5C5d).			
14	49 500	1m	
15	10 000	1m	
16	120	1m	
Question 16 commentary: Pupils are expected to use their knowledge of table facts to answer this question.			
17	300	1m	
18	9.12	1m	

Qu.	Requirement	Mark	Additional guidance
19	$\frac{5}{9}$	**1m**	Accept equivalent fractions or the **exact** decimal equivalent, e.g. $0.\overline{5}$ (accept any unambiguous indication of the recurring digit). **Do not** accept rounded or truncated decimals.
Question 19 commentary: This question is also expressed in common fractions and pupils should give their answer as a common fraction. This fraction answer does have a recurring decimal equivalent which would also be creditworthy. However, a decimal answer truncated to 0.5 or rounded to 0.56 for example would not be awarded the mark.			
20	14 399	**1m**	
21	1501	**1m**	
22	5.99	**1m**	
23	Award **TWO** marks for the correct answer of 1242 If the answer is incorrect, award **ONE** mark for the formal method of long multiplication which contains no more than **ONE** arithmetical error, e.g. • 54 × 23 = 162 + 1080 = wrong answer	**Up to 2m**	**Do not** award any marks if: • the error is in the place value, e.g. the omission of the zero when multiplying by tens: 54 × 23 = 162 + 108 = wrong answer • the final (answer) line of digits is missing. Working must be carried through to reach an answer for the award of **ONE** mark.
Question 23 commentary: Two marks are awarded for the correct answer. However, if the answer is incorrect, one mark can only be awarded if the pupil has used the formal method of long multiplication.			
24	6.52	**1m**	

Qu.	Requirement	Mark	Additional guidance
25	Award **TWO** marks for the correct answer of 232 If the answer is incorrect, award **ONE** mark for the formal methods of division which contains no more than **ONE** arithmetical error, e.g. • long division algorithm wrong answer 13 ⟌ 3016 26 41 – 39 26 – 26 0 • short division algorithm wrong answer 13 ⟌ 3 $0^{4}1^{2}6$	**Up to 2m**	Working must be carried through to reach an answer for the award of **ONE** mark. **Do not** award any marks if the final (answer) line of digits is missing. Short division methods must be supported by evidence of appropriate carrying figures to indicate the use of a division algorithm, and be a complete method.
Question 25 commentary: Two marks are awarded for the correct answer. However, if the answer is incorrect, one mark can only be awarded if the pupil has used one of the formal methods of long or short division. An appropriate carrying figure in short division must be less than 13 in this instance.			
26	$\frac{1}{32}$	**1m**	Accept equivalent fractions or the **exact** decimal equivalent, e.g. 0.03125 **Do not** accept rounded or truncated decimals.
27	228	**1m**	
28	188 901	**1m**	

Qu.	Requirement	Mark	Additional guidance
29	Award **TWO** marks for the correct answer of 36 612 If the answer is incorrect, award **ONE** mark for the formal method of long multiplication which contains no more than **ONE** arithmetical error, e.g. • 678 × 54 = 33900 + 2712 = wrong answer	**Up to 2m**	**Do not** award any marks if: • the error is in the place value, e.g. the omission of the zero when multiplying by tens, i.e. 678 × 54 = 3390 + 2712 = wrong answer • the final (answer) line of digits is missing. Working must be carried through to reach an answer for the award of **ONE** mark.
30	$25\frac{1}{2}$	**1m**	Accept equivalent fractions or an **exact** decimal equivalent, e.g. 25.5
31	12	**1m**	
Question 31 commentary: Pupils are expected to use their knowledge of the order of operations to carry out calculations involving the four operations (6C9) in this case to evaluate 4 × 2 first and then to subtract that product from 20			
32	$\frac{1}{5}$	**1m**	Accept equivalent fractions or an **exact** decimal equivalent, e.g. 0.2
33	$\frac{19}{20}$	**1m**	Accept equivalent fractions or an **exact** decimal equivalent, e.g. 0.95 **Do not** accept rounded or truncated decimals.

Qu.	Requirement	Mark	Additional guidance
34	Award **TWO** marks for the correct answer of 63 If the answer is incorrect, award **ONE** mark for the formal methods of division which contain no more than **ONE** arithmetical error, e.g. • long division algorithm wrong answer 37 | 2331 − 222 111 − 111 0 • short division algorithm wrong answer 37 | 2 3 3^{11}1	**Up to 2m**	Working must be carried through to reach an answer for the award of **ONE** mark. **Do not** award any marks if the final (answer) line of digits is missing. Short division methods must be supported by evidence of appropriate carrying figures to indicate the use of a division algorithm, and be a complete method.
35	$1\frac{5}{8}$	**1m**	Accept equivalent fractions or an **exact** decimal equivalent, e.g. 1.625 **Do not** accept rounded or truncated decimals.
36	$\frac{3}{8}$	**1m**	Accept equivalent fractions or an **exact** decimal equivalent, e.g. 0.375 **Do not** accept rounded or truncated decimals.

8. Mark schemes for Paper 2: reasoning

Qu.	Requirement	Mark	Additional guidance
1	257	1m	
2	Award **TWO** marks for the correct answer of 122 If the answer is incorrect, award **ONE** mark for evidence of an appropriate method, e.g. • $4 \times 7 = 28$ $150 - 28$	Up to 2m	Answer need not be obtained for the award of **ONE** mark.
3a	Paris	1m	
3b	3		**Do not** accept –3
4	Award **TWO** marks for four shapes matched correctly as shown: 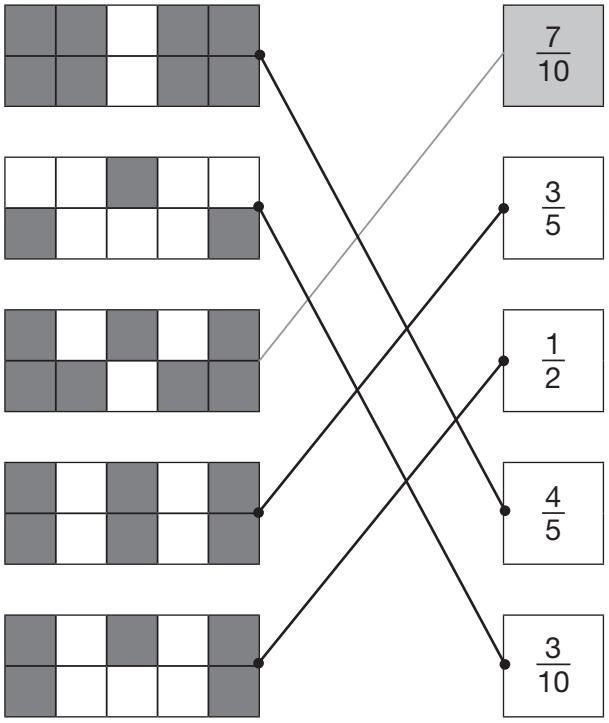 If the answer is incorrect, award **ONE** mark for three shapes matched correctly.	Up to 2m	Lines need not touch shapes or fraction boxes, provided the intention is clear. **Do not** credit any shape that has been matched to more than one fraction.
5	7 hours and 24 minutes	1m	
6	7 minutes to 9 **OR** 8:53	1m	

Qu.	Requirement	Mark	Additional guidance
7	Award **TWO** marks for three rows completed correctly as shown: 50 (120) **OR** 140 **OR** 160 **OR** 180 (210) **OR** 240 **OR** 270 (320) **OR** 360 If the answer is incorrect, award **ONE** mark for two rows correct.	**Up to 2m**	
8a	£2.55	**1m**	
8b	Award **TWO** marks for the correct answer of 25 If the answer is incorrect, award **ONE** mark for evidence of an appropriate method, e.g. • £5.15 – 15p = £5 £5 ÷ 20p **OR** • £5.15 – 15p = £5 5 × 5	**Up to 2m**	Answer need not be obtained for the award of **ONE** mark.
Question 8b commentary: The 2014 national curriculum specifies that pupils should use simple formulae (6A2).			
9a	Answer in the range 5.5cm to 5.9cm **inclusive**.	**1m**	
9b	Answer in the range 143° to 147° **inclusive**.	**1m**	
Question 9b commentary: Some measures questions specify the unit to be used. Where the unit is given in the question lozenge and in the answer box, it must be used. If pupils express their answers using a different unit, e.g. as 57mm in the first part of this question, the mark will not be awarded.			
10	Award **TWO** marks for both digits correct, as shown: $\begin{array}{rr} & 4\,\boxed{1} \\ \times & \boxed{2}\,6 \\ \hline & 2\,4\,6 \\ & 8\,2\,0 \\ \hline 1 & 0\,6\,6 \end{array}$ If the answer is incorrect, award **ONE** mark for one digit correct.	**Up to 2m**	

Qu.	Requirement	Mark	Additional guidance
11	115	**1m**	
Question 11 commentary: The 2014 national curriculum specifies that pupils should read Roman numerals to 100 (4N3a) and then to 1000 (5N3a).			
12	1.75	**1m**	
13a	Line drawn parallel to A, as shown: 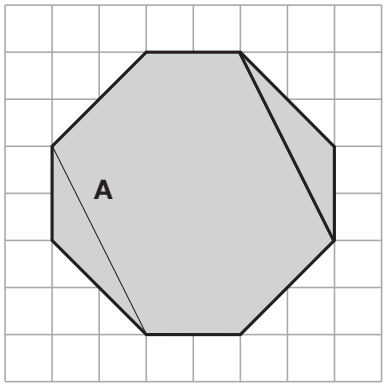	**1m**	Accept slight inaccuracies in drawing, provided the intention is clear.
13b	Line drawn perpendicular to A, as shown: 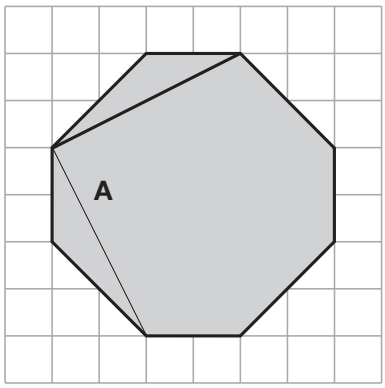 **OR** 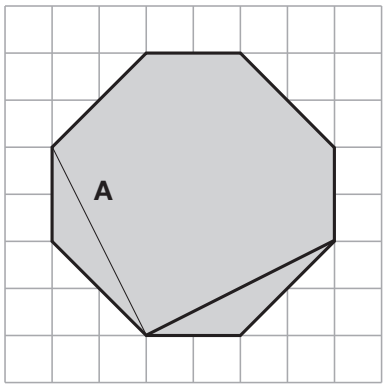	**1m**	Accept slight inaccuracies in drawing, provided the intention is clear.

Qu.	Requirement	Mark	Additional guidance
14	Award **TWO** marks for all three numbers correctly rounded: 120 000 125 000 124 500 If the answer is incorrect, award **ONE** mark for any two numbers correctly rounded.	**Up to 2m**	
15	Award **TWO** marks for the correct answer of 104° If the answer is incorrect, award **ONE** mark for evidence of an appropriate method, e.g. • 180 – 38 – 38 = a	**Up to 2m**	Answer need not be obtained for the award of **ONE** mark.
16	Award **TWO** marks for the correct answer of £5.75 If the answer is incorrect, award **ONE** mark for evidence of an appropriate method, e.g. • £6.75 × 3 = £20.25 £20.25 + £8.50 = £28.75 £28.75 ÷ 5	**Up to 2m**	Answer need not be obtained for the award of **ONE** mark.
17	Award **TWO** marks for the correct answer of 145 If the answer is incorrect, award **ONE** mark for evidence of an appropriate method, e.g. • 144 136 142 143 152 148 + 150 1015 1015 ÷ 7	**Up to 2m**	Answer need not be obtained for the award of **ONE** mark.

Qu.	Requirement	Mark	Additional guidance
18	Award **ONE** mark for an explanation which recognises that the two pie charts represent different numbers of children, e.g. • '25 boys like milk chocolate best and more than 25 girls do' • 'It's almost half of 100 girls and that's more than half of 50 boys' • 'The pie chart shows that half of the boys chose milk chocolate and that's 25. About 45 girls chose milk chocolate because it's nearly half of the girls' pie chart' • '25 boys chose milk chocolate, but (whole number in the range 40–49) girls chose milk chocolate' • 'There are twice as many girls as boys so a quarter of the girls' pie chart is the same number as half of the boys' pie chart, and it's more than a quarter of the girls' • '$\frac{1}{2}$ of 50 boys chose milk = 25 $\frac{1}{4}$ of 100 girls chose plain = 25 and from the girls' pie chart it is obvious that more chose milk than plain' • 'There are twice as many girls as boys and the sizes of the pie charts show this and the area for boys who like milk chocolate is smaller than the area for girls who like it'.	1m	**Do not** accept vague or incomplete explanations, e.g. • '100 is more than 50' • 'More girls took part than boys so more girls like milk chocolate' • 'The section for boys who like milk chocolate is smaller than the section for girls who like it'.

Question 18 commentary: The pie charts are presented using the mathematical convention that their areas are proportional to the numbers they represent, i.e. in this example the chart for girls has twice the area of the chart for boys.

Qu.	Requirement	Mark	Additional guidance
19	Award **TWO** marks for the correct answer of £16 470 If the answer is incorrect, award **ONE** mark for evidence of an appropriate method, e.g. • £32.94 × 1000 = £32 940 £32 940 ÷ 2 **OR** • £32.94 × 500 = £3294 × 5	**Up to 2m**	Answer need not be obtained for the award of **ONE** mark.
20	Award **TWO** marks for the correct answer of 150 pages. If the answer is incorrect, award **ONE** mark for evidence of an appropriate method, e.g. • $\frac{3}{5} = 90$ 9 ÷ 3 = 30 30 × 5 **OR** • 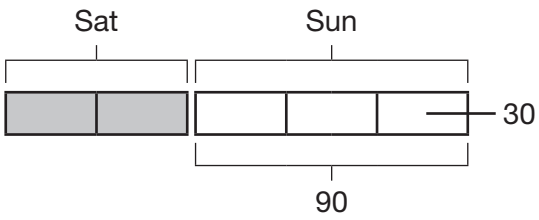 30 × 5	**Up to 2m**	Answer need not be obtained for the award of **ONE** mark.

9. Mark schemes for Paper 3: reasoning

<table>
<tr><th>Qu.</th><th>Requirement</th><th>Mark</th><th>Additional guidance</th></tr>
<tr><td>1</td><td>Award TWO marks for three boxes completed correctly, e.g.
<table><tr><td></td><td>multiple of 5</td><td>not a multiple of 5</td></tr><tr><td>multiple of 3</td><td>30</td><td>3, 6, 9 etc</td></tr><tr><td>not a multiple of 3</td><td>5, 10, 20 etc</td><td>1, 2, 4, 7 etc</td></tr></table>If the answer is incorrect, award ONE mark for at least two boxes completed correctly.</td><td>Up to 2m</td><td>Accept more than one correct multiple in any box.
Do not accept any box containing a correct multiple and an incorrect number.</td></tr>
<tr><td>2</td><td>Award TWO marks for both numbers correct as shown.
–12 –5 2
If the answer is incorrect, award ONE mark for one number correct.</td><td>Up to 2m</td><td>Do not accept 12–
Accept +2 in the right-hand box.</td></tr>
<tr><td>3a
3b</td><td>4
6</td><td>1m
1m</td><td>Do not accept four OR 400
Do not accept six OR $\frac{6}{100}$</td></tr>
<tr><td colspan="4">Question 3 commentary: This question assesses place value in whole numbers up to 1 000 000 (5N3a) and in decimals (5F6b).</td></tr>
<tr><td>4a

4b</td><td>February and April in either order.

£80</td><td>1m

1m</td><td>Accept alternative unambiguous indications, e.g. F and A.
Do not accept the amounts collected in February and April, i.e. £55 and £65</td></tr>
</table>

Qu.	Requirement	Mark	Additional guidance
5	Arrow or line drawn to a point in the range 160ml to 170ml **exclusive**. 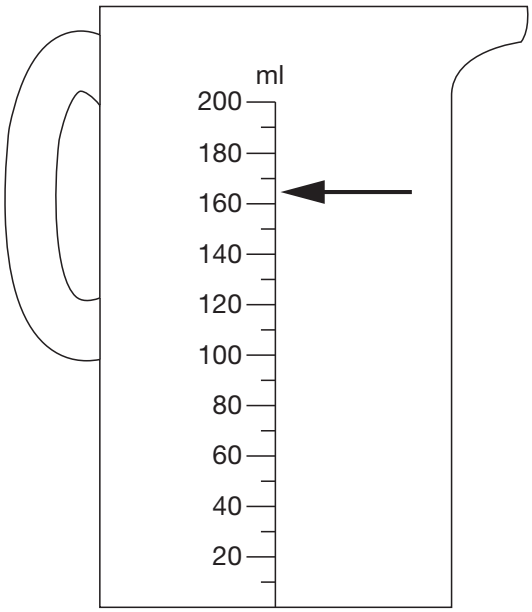 	**1m**	**Do not** accept arrow drawn to 160ml or 170ml.
6	Award **TWO** marks for all three calculations completed correctly, as shown: 5.3 **÷ 10** = 0.53 5.3 **× 1000** = 5300 5.3 **÷ 100** = 0.053 If the answer is incorrect, award **ONE** mark for two calculations correct.	**Up to 2m**	
7	Fifty-three thousand, one hundred and forty-eight	**1m**	

Qu.	Requirement	Mark	Additional guidance
8	Award **TWO** marks for three vertices of the shape, excluding B, translated correctly as shown below: 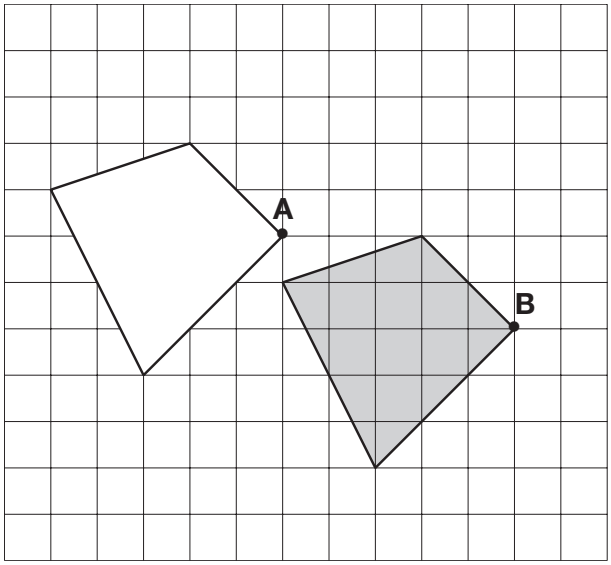 If the answer is incorrect, award **ONE** mark for two vertices, excluding B, translated correctly.	**Up to 2m**	Accept slight inaccuracies in drawing provided intention is clear.
9	Award **TWO** marks for the correct answer of 29.25g If the answer is incorrect, award **ONE** mark for evidence of an appropriate method, e.g. • 6.5 ÷ 2 = 3.25 3 × 6.5 = 20.5 (*error*) 3 × 3.25 = 9.75 20.5 + 9.75 **OR** • 10p + 5p weigh 6.5g + 3.25g = 9.75 3 of each coin = 9.75 × 3	**Up to 2m**	Answer need not be obtained for the award of **ONE** mark.
10	Award **TWO** marks for the correct answer of 25p or £0.25 If the answer is incorrect, award **ONE** mark for evidence of an appropriate method, e.g. • Lemons £1 ÷ 5 = 20p each Oranges £1.80 ÷ 4 = 45p each 45p – 20p	**Up to 2m**	Answer need not be obtained for the award of **ONE** mark.

Qu.	Requirement	Mark	Additional guidance
11	Award **TWO** marks for four boxes completed correctly, as shown. 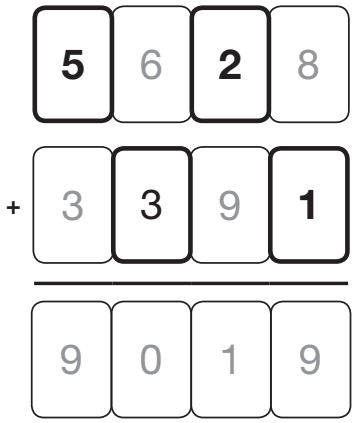 If the answer is incorrect, award **ONE** mark for three boxes completed correctly.	**Up to 2m**	
12	0.993	**1m**	
13	Award **ONE** mark for any of the following: $\frac{7}{16} < \frac{6}{12} < \frac{5}{8}$ **OR** $\frac{7}{16} < \frac{6}{12} < \frac{3}{4}$ **OR** $\frac{7}{16} < \frac{5}{8} < \frac{3}{4}$ **OR** $\frac{6}{12} < \frac{5}{8} < \frac{3}{4}$	**1m**	Accept equivalent fractions correctly ordered, e.g. $\frac{21}{48} < \frac{24}{48} < \frac{30}{48}$ $\frac{21}{48} < \frac{24}{48} < \frac{36}{48}$ $\frac{7}{16} < \frac{10}{16} < \frac{12}{16}$ $\frac{12}{24} < \frac{15}{24} < \frac{18}{24}$

Qu.	Requirement	Mark	Additional guidance
14	Award **TWO** marks for three numbers correctly placed. 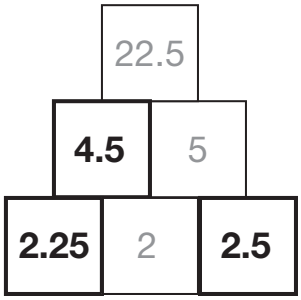 If the answer is incorrect award **ONE** mark for two numbers correctly placed.	**Up to 2m**	
Question 14 commentary: This question involves multiplying and dividing decimals where the answer has up to two decimal places (6F9).			
15	A quadrilateral with three acute angles, e.g. 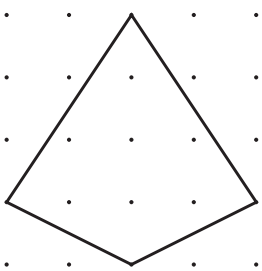 **OR** 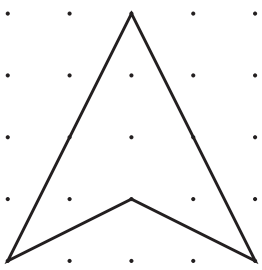 **OR** 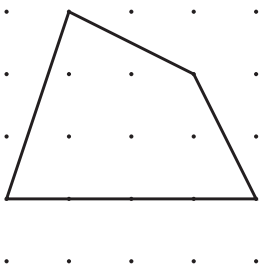	**1m**	Accept inaccurate drawing provided the intention is clear.

Qu.	Requirement	Mark	Additional guidance
16	Award **TWO** marks for the correct answer of 96 If the answer is incorrect, award **ONE** mark for evidence of an appropriate method, e.g. • $10.5 \times 2 = 21$ $21 + 11 = 32$ 32×3	**Up to 2m**	Answer need not be obtained for the award of **ONE** mark.
17	35%	**1m**	
18	Award **TWO** marks for the correct answer of 90g If the answer is incorrect, award **ONE** mark for evidence of an appropriate method, e.g. • $300 \div 400 = \frac{3}{4}$ $\frac{3}{4} \times 120$	**Up to 2m**	Answer need not be obtained for the award of **ONE** mark.

Qu.	Requirement	Mark	Additional guidance
19	Award **THREE** marks for the correct answer of 3076 square metres. If the answer is incorrect, award **TWO** marks for: • sight of 9184 as evidence of the multiplication for the first step completed correctly **OR** • evidence of an appropriate method which contains no more than **ONE** arithmetical error, e.g. $\begin{array}{r} 112 \\ \times\ 82 \\ \hline 8960 \\ 224 \\ \hline 9187 \end{array}$ *(error)* $\begin{array}{r} 9187 \\ -\ 6108 \\ \hline 3079 \end{array}$ • Award **ONE** mark for evidence of an appropriate method which contains more than **ONE** arithmetical error.	**Up to 3m**	**Do not** award any marks if the error is in the place value of the multiplication, e.g. the omission of the final zero when multiplying by tens, e.g. $\begin{array}{r} 112 \\ \times\ 82 \\ \hline 896 \\ 224 \\ \hline \end{array}$ wrong answer
Question 19 commentary: As well as a range of 1 mark and 2 mark questions, one of the questions in a suite of tests may now attract three marks. The solution to a 3 mark question may involve more steps or, as in this example, more complex calculations.			
20a	(12, 0)	**1m**	Accept unambiguous answers written on the diagram.
20b	(9, –8)	**1m**	If the answer to 20a is (9, –8) **AND** the answer to 20b is (12, 0) then award **ONE** mark for 20b.

[BLANK PAGE]

This page is intentionally blank.

Standards & Testing Agency

Sample key stage 2 mathematics test mark schemes
Electronic PDF version product code: STA/15/7335/e ISBN: 978-1-78315-820-1

For more copies
Additional printed copies of this booklet are not available. It can be downloaded from www.gov.uk/government/publications.

© Crown copyright and Crown information 2015

Re-use of Crown copyright and Crown information in test materials
Subject to the exceptions listed below, the test materials on this website are Crown copyright or Crown information and you may re-use them (not including logos) free of charge in any format or medium in accordance with the terms of the Open Government Licence v3.0 which can be found on the National Archives website and accessed via the following link: www.nationalarchives.gov.uk/doc/open-government-licence. When you use this information under the Open Government Licence v3.0, you should include the following attribution: 'Contains public sector information licensed under the Open Government Licence v3.0' and where possible provide a link to the licence.

OGL

Exceptions – third-party copyright content in test materials
You must obtain permission from the relevant copyright owners, as listed in the '2016 sample tests copyright report', for re-use of any third-party copyright content which we have identified in the test materials, as listed below. Alternatively you should remove the unlicensed third-party copyright content and/or replace it with appropriately licensed material.

Third-party content
These materials contain no third-party copyright content.

If you have any queries regarding these test materials contact the national curriculum assessments helpline on 0300 303 3013 or email assessments@education.gov.uk.